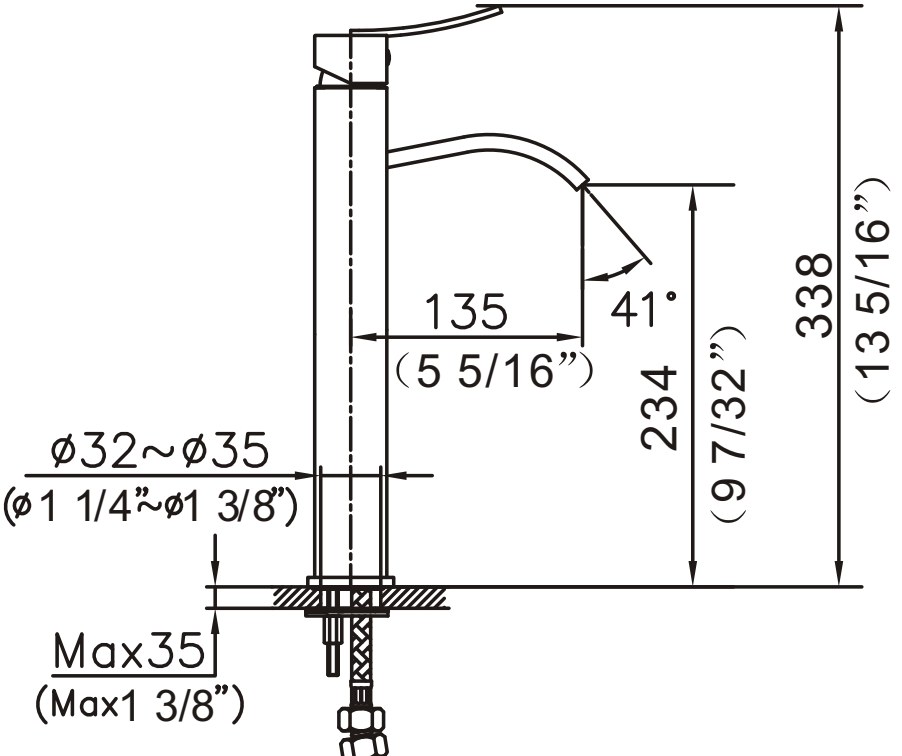
135
(5 5/16")
41°
234
(9 7/32")
338
(13 5/16")
ø32~ø35
(ø1 1/4"~ø1 3/8")
Max35
(Max1 3/8")